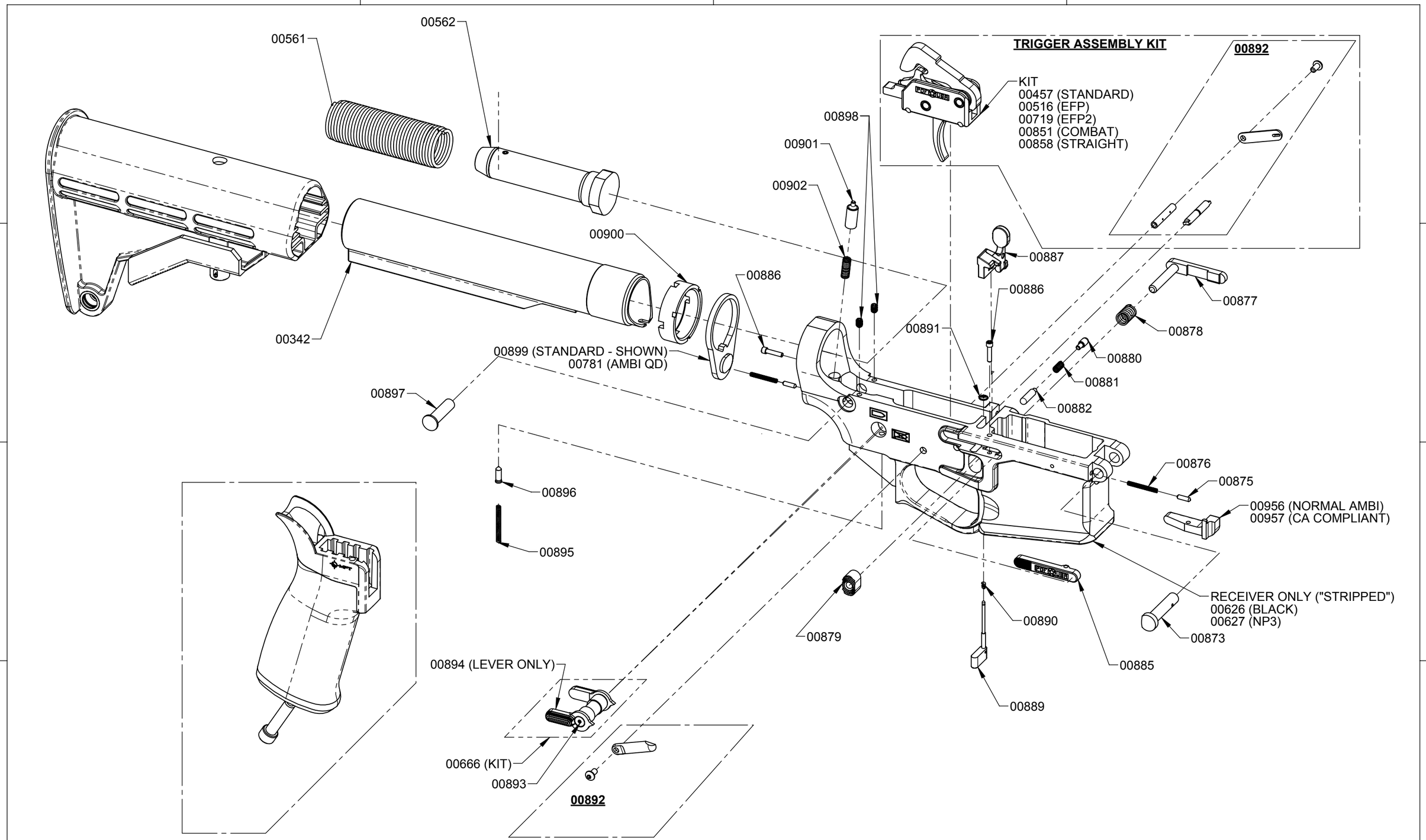

POF-USA GEN 4 P415 LOWER RECEIVER COMPONENTS BY SKU NUMBER

REVISION DATE: 06/11/2019

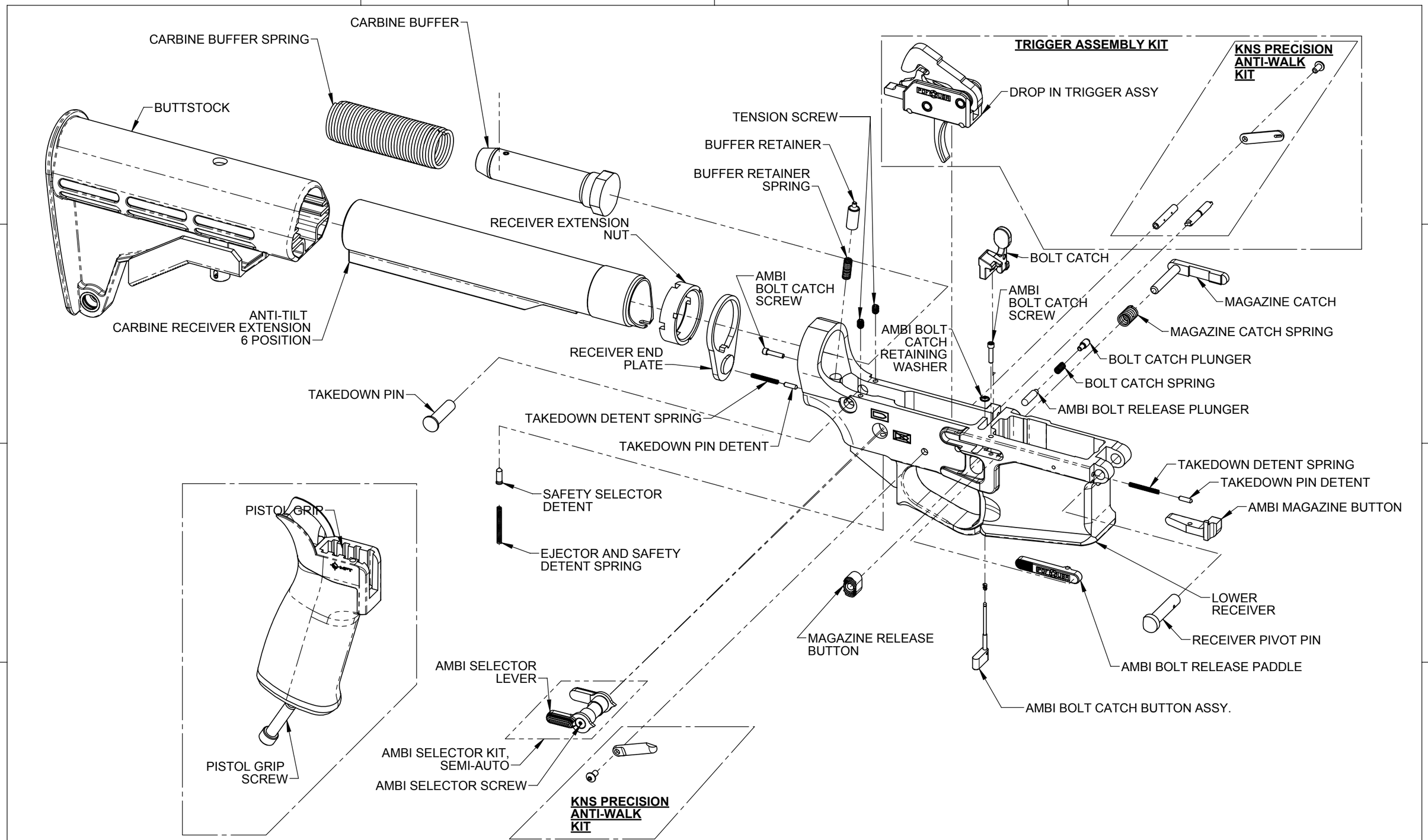

POF-USA GEN 4 P415 LOWER RECEIVER COMPONENTS BY DESCRIPTION

REVISION DATE: 06/11/2019