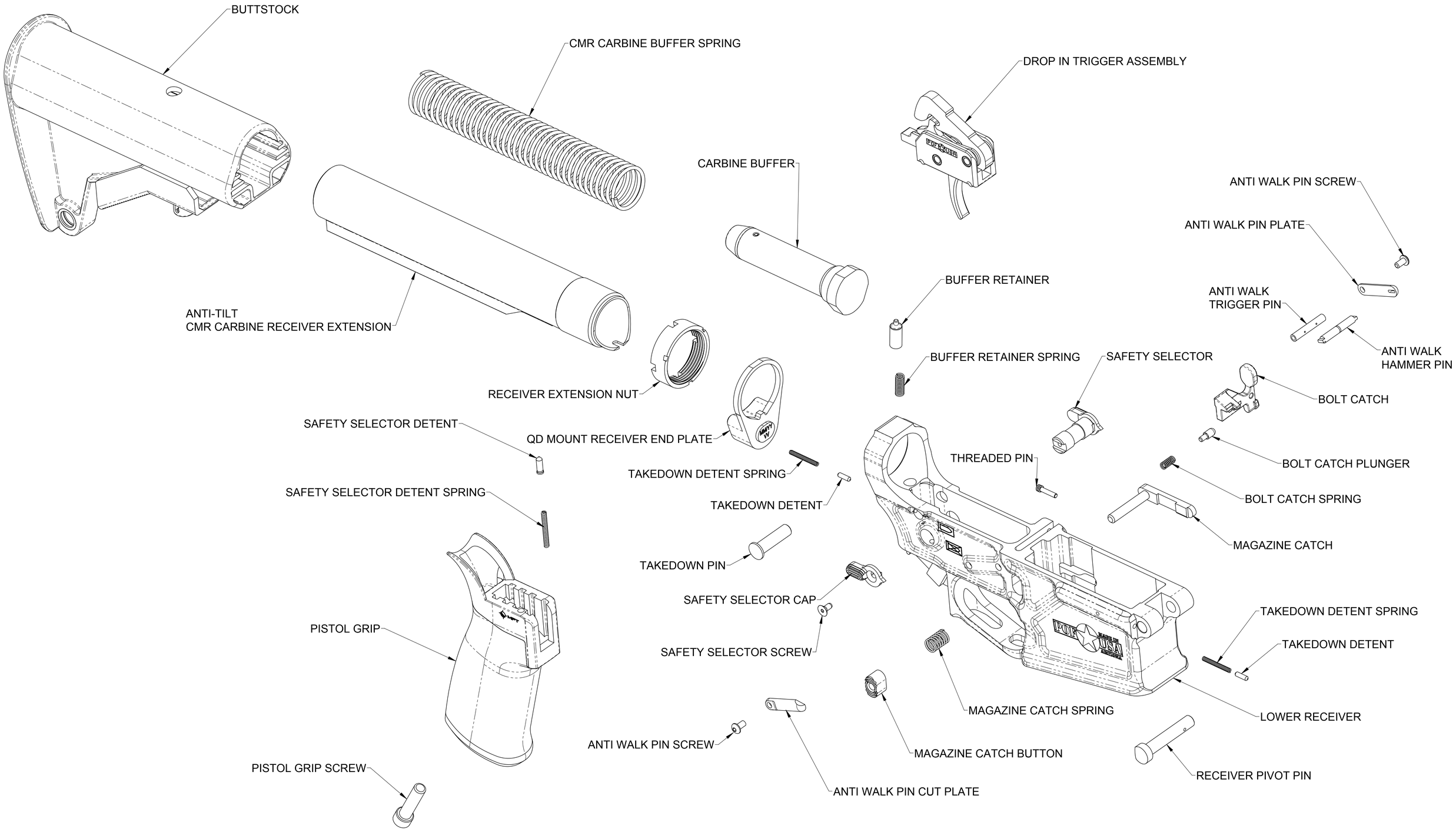

POF-USA LMR LOWER RECEIVER COMPONENTS BY DESCRIPTION

REV DATE: 08/27/2020

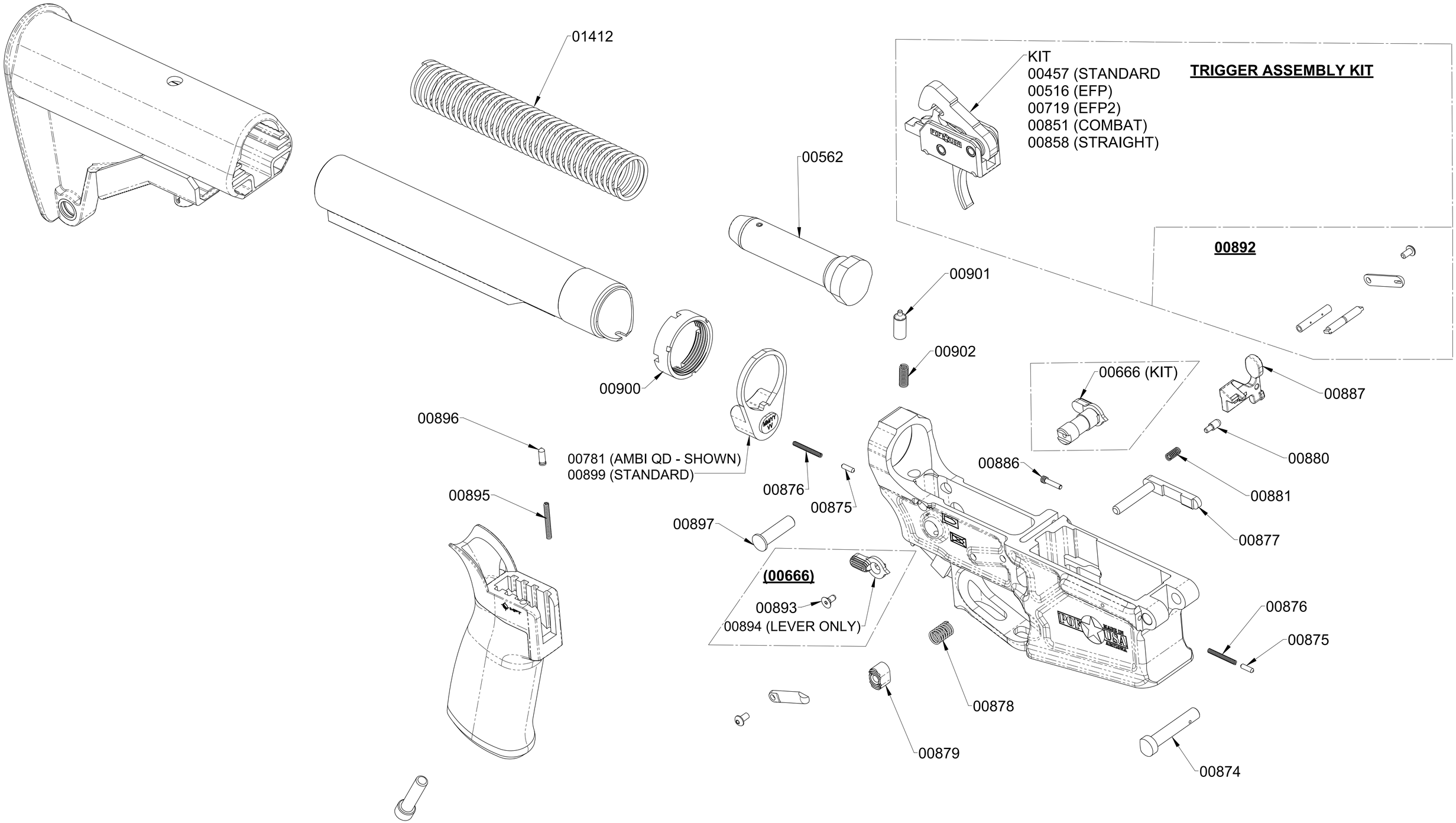

POF-USA LMR LOWER RECEIVER COMPONENTS BY SKU NUMBER

REV DATE: 08/27/2020